APPROSINE®
CUISINE & BAIN

Receveur WALK IN 90 x 90
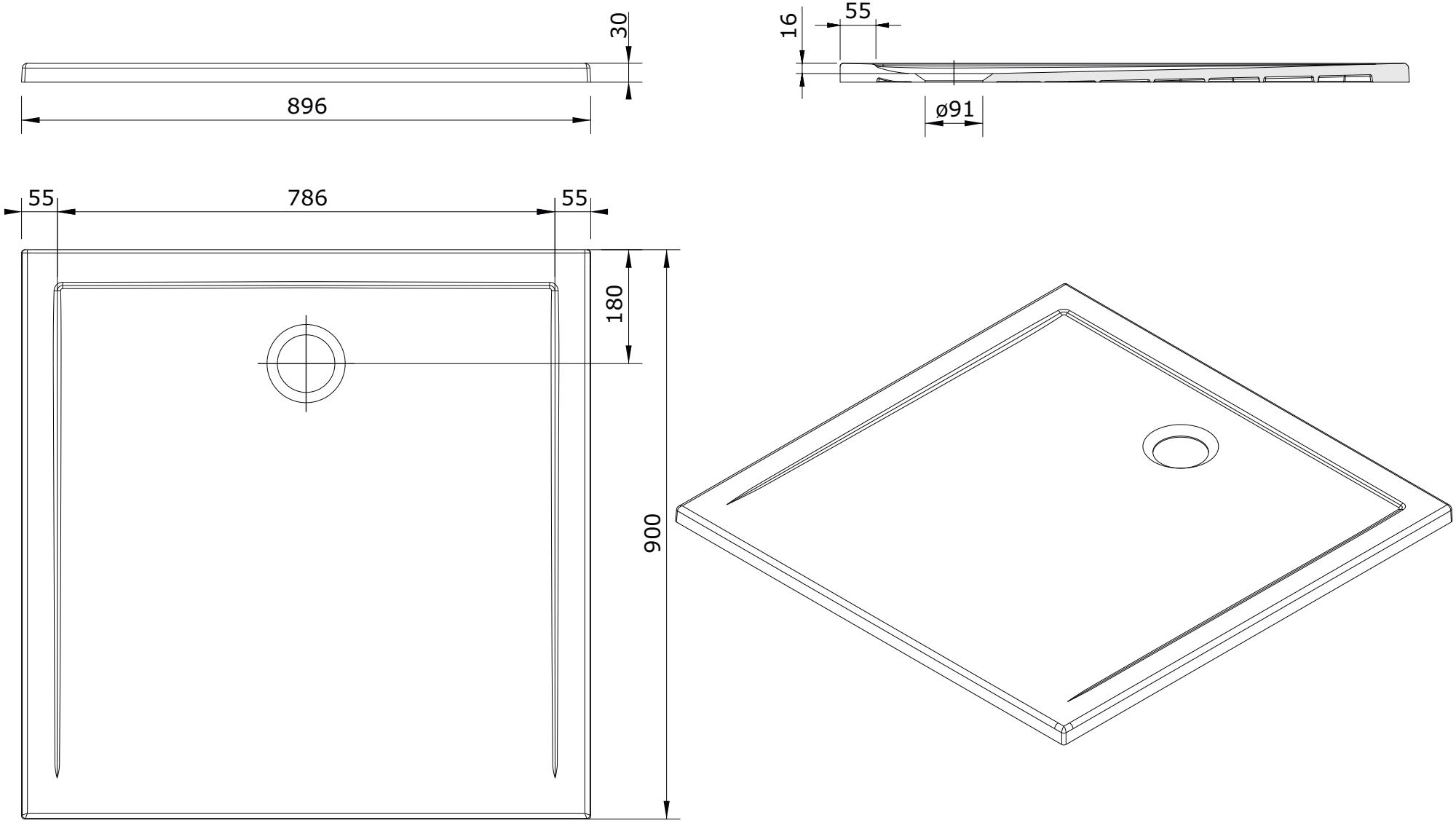
Ref. : W107530