APPROSINE®
CUISINE & BAIN

Receveur WALK IN 80 x 80
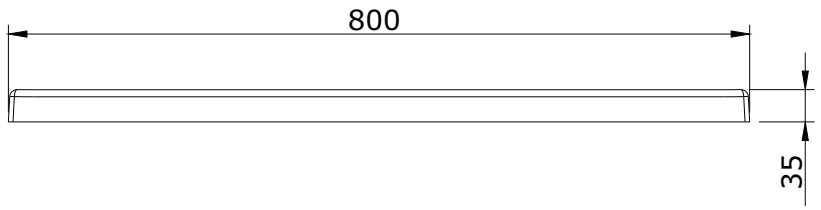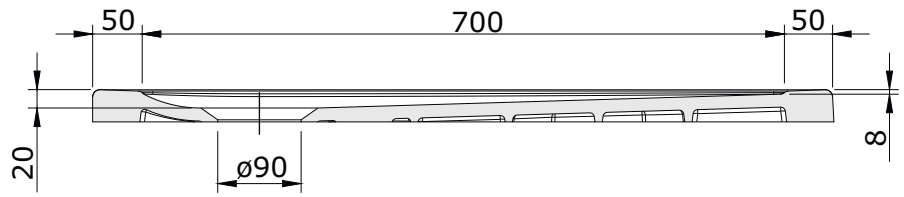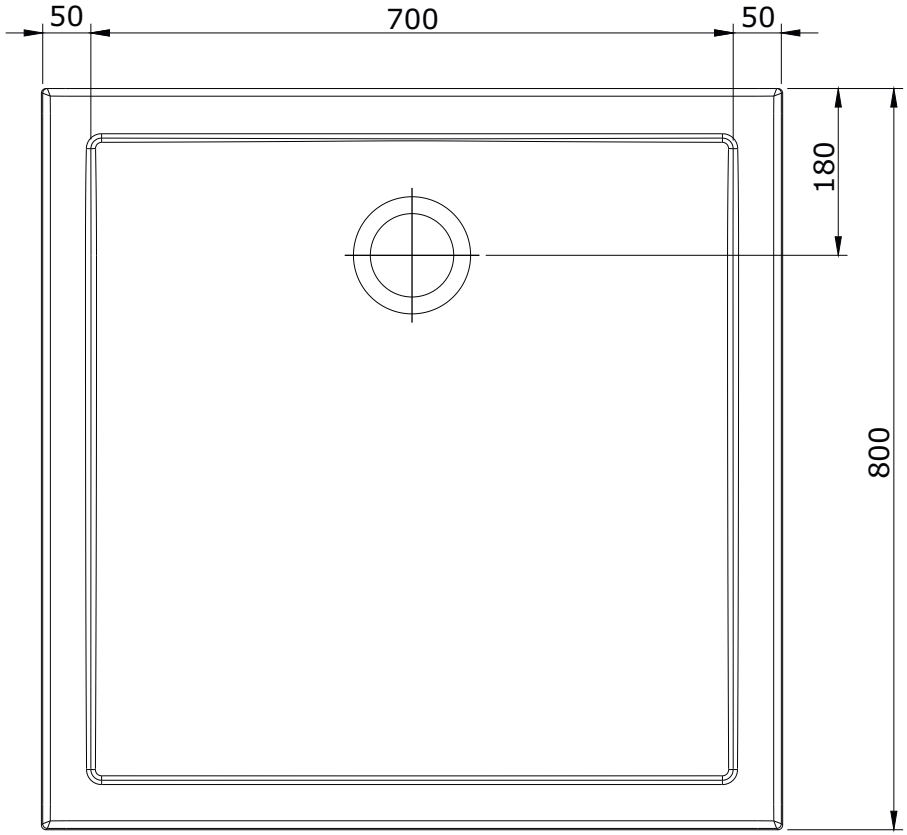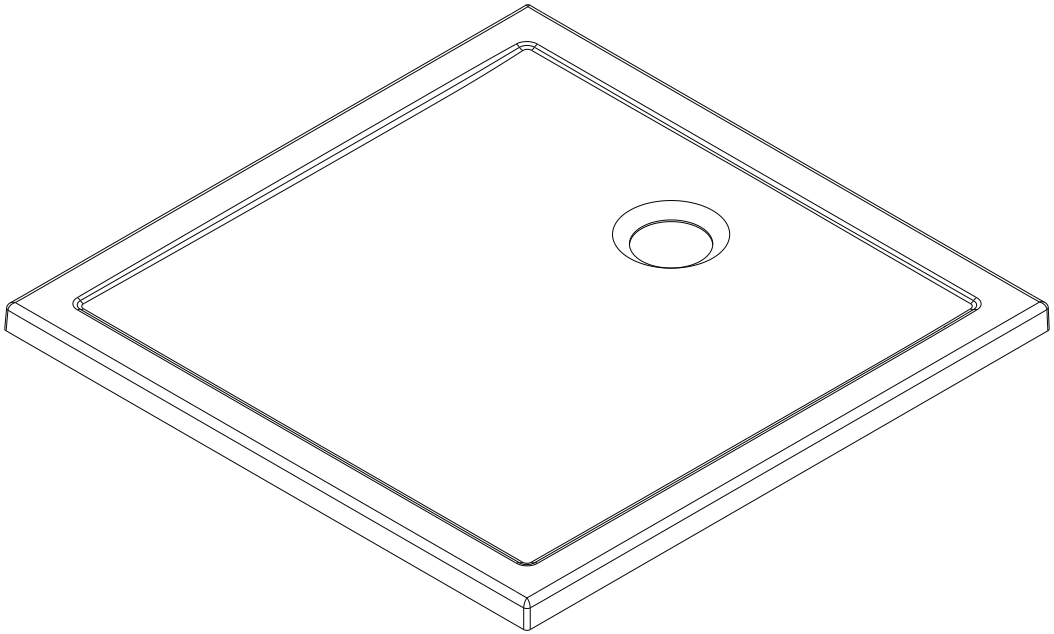
Ref. : W107520